ARTALYS France
Tél. : +33 (0)4 66 63 85 79 - info@artalys-france.fr
www.artalys-france.fr

CHENONCEAU HOUSEKEEPING TROLLEY



Equipped with:

- 70 mm-high guest amenities bin with adjustable dividers.
- 2 shelves.
- 1 lift-up dirty laundry bag holder.
- 130 L dirty laundry bag included.
- Protective bumpers on the base corners.

Photos are non-contractual

Book a personalized appointment with an ARTALYS France expert now.
Contact us at +33 (0)4 66 63 85 79

Discover our complete range of rolling stock for professionals on our website artalys-france.fr

ARTALYS France
Tél. : +33 (0)4 66 63 85 79 - info@artalys-france.fr
www.artalys-france.fr

PRODUCT INFORMATION

Reference	AED-HKCHENONCEAU
Weight	20.5 kg
Hardware	Square steel tubes Aluminium shelves
Wheels	4 rubber swivel wheels Ø125mm
Load capacity	150kg
Room capacity	8 à 12
Structure color	Anthracite (RAL 7012)
Color bag	Night blue, Bordeaux, Grey

ADDITIONAL INFORMATION





Book a personalized appointment with an ARTALYS France expert now.
Contact us at +33 (0)4 66 63 85 79

ARTALYS France
Tél. : +33 (0)4 66 63 85 79 - info@artalys-france.fr
www.artalys-france.fr

VARIATIONS

Image	Structure color	Color bag
	Anthracite (RAL 7012)	Night blue
	Anthracite (RAL 7012)	Bordeaux
	Anthracite (RAL 7012)	Grey

Book a personalized appointment with an ARTALYS France expert now.
Contact us at +33 (0)4 66 63 85 79

Discover our complete range of rolling stock for professionals on our website artalys-france.fr

ARTALYS France
Tél. : +33 (0)4 66 63 85 79 - info@artalys-france.fr
www.artalys-france.fr

DIMENSIONS

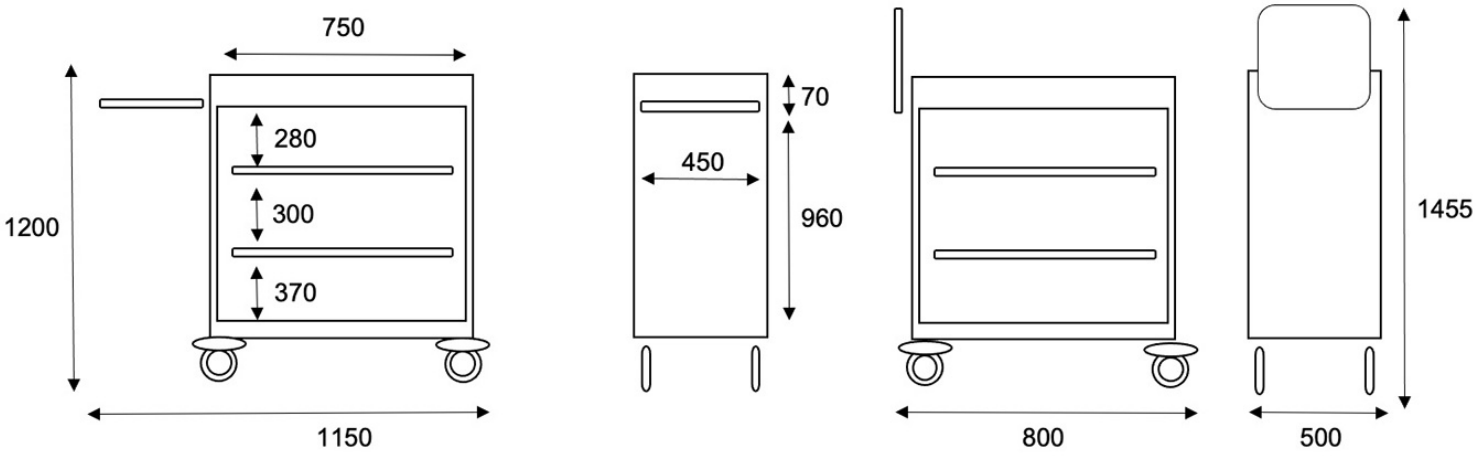

Book a personalized appointment with an ARTALYS France expert now.
Contact us at +33 (0)4 66 63 85 79