ARTALYS France
Tél. : +33 (0)4 66 63 85 79 - info@artalys-france.fr
www.artalys-france.fr

KOUROU HOUSEKEEPING TROLLEY



Equipped with:

- Amenities tray with 3 adjustable dividers.
- 2 shelves.
- 1 foldable waste sorting bag holder, with 2 lids.
- Protective bumpers on the base corners.

Non-contractual photos

Book a personalized appointment with an ARTALYS France expert now.
Contact us at +33 (0)4 66 63 85 79

ARTALYS France
Tél. : +33 (0)4 66 63 85 79 - info@artalys-france.fr
www.artalys-france.fr

PRODUCT INFORMATION

DIMENSIONS

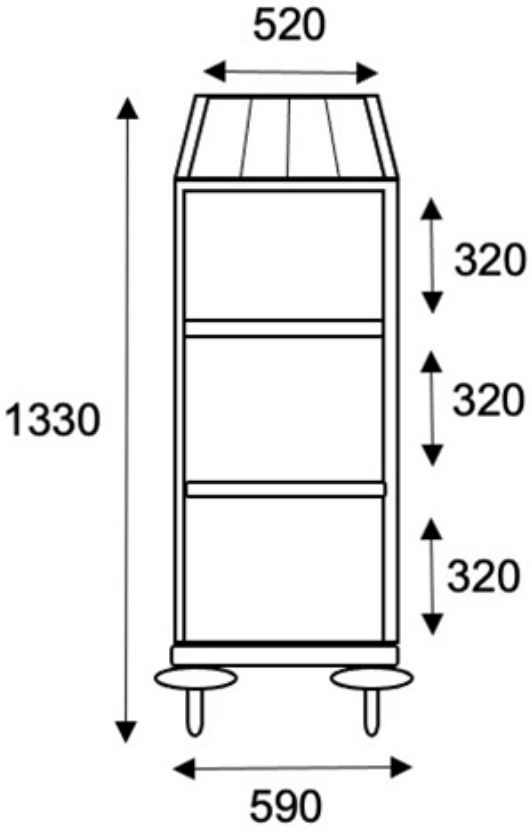

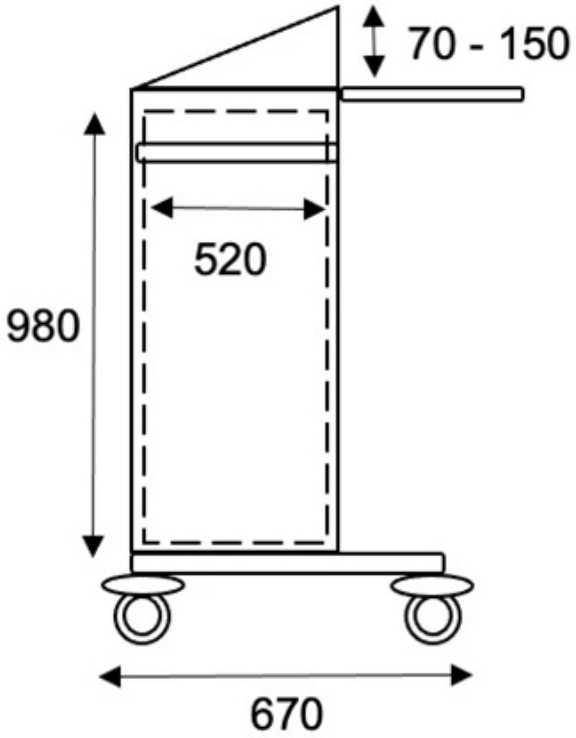

OPTIONS



P-F-FLASK HOLDER
Bottle holder



EC-P
Ergo-Cale Door Wedge



BAC-GCK
BAC for cleaning products



Col
Choice of colors. * from 10 pieces or mini 10 carts



C-B
Broom clip

Book a personalized appointment with an ARTALYS France expert now.
Contact us at +33 (0)4 66 63 85 79

Discover our complete range of rolling stock for professionals on our website artalys-france.fr

ARTALYS France
Tél. : +33 (0)4 66 63 85 79 - info@artalys-france.fr
www.artalys-france.fr



RID
Hide curtain in black leatherette

Book a personalized appointment with an ARTALYS France expert now.
Contact us at +33 (0)4 66 63 85 79