ARTALYS France
Tél. : +33 (0)4 66 63 85 79 - info@artalys-france.fr
www.artalys-france.fr

PERPIGNAN ROOM SERVICE TROLLEY



Equipped with:

- 2 levels.
- Transport of up to 6 heating boxes (ETNA).
- Simultaneous recharging of up to 6 ETNA units on the trolley, using a single power outlet.

Non-contractual photo

Book a personalized appointment with an ARTALYS France expert now.
Contact us at +33 (0)4 66 63 85 79

Discover our complete range of rolling stock for professionals on our website artalys-france.fr

ARTALYS France
Tél. : +33 (0)4 66 63 85 79 - info@artalys-france.fr
www.artalys-france.fr

PRODUCT INFORMATION

VARIATIONS

Image


Book a personalized appointment with an ARTALYS France expert now.
Contact us at +33 (0)4 66 63 85 79

Discover our complete range of rolling stock for professionals on our website artalys-france.fr

ARTALYS France
Tél. : +33 (0)4 66 63 85 79 - info@artalys-france.fr
www.artalys-france.fr

DIMENSIONS

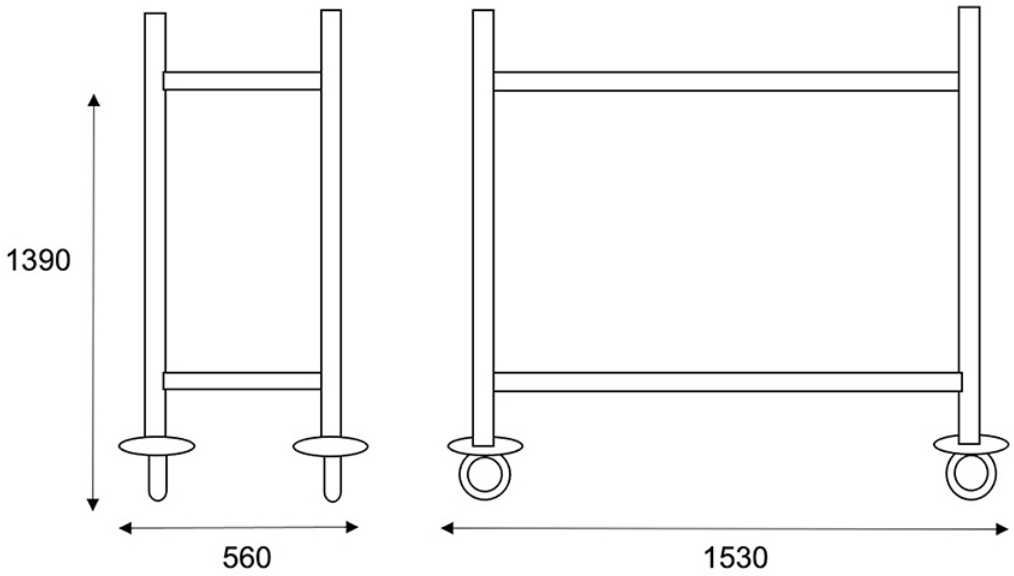

OPTIONS



M
Motorization

Book a personalized appointment with an ARTALYS France expert now.
Contact us at +33 (0)4 66 63 85 79